Smart grid technologies for a more flexible, resilient and digital grid

Clara Gouveia, clara.s.gouveia@inesctec.pt

Energy Transition Dialogue Luxembourg

24th October 2019

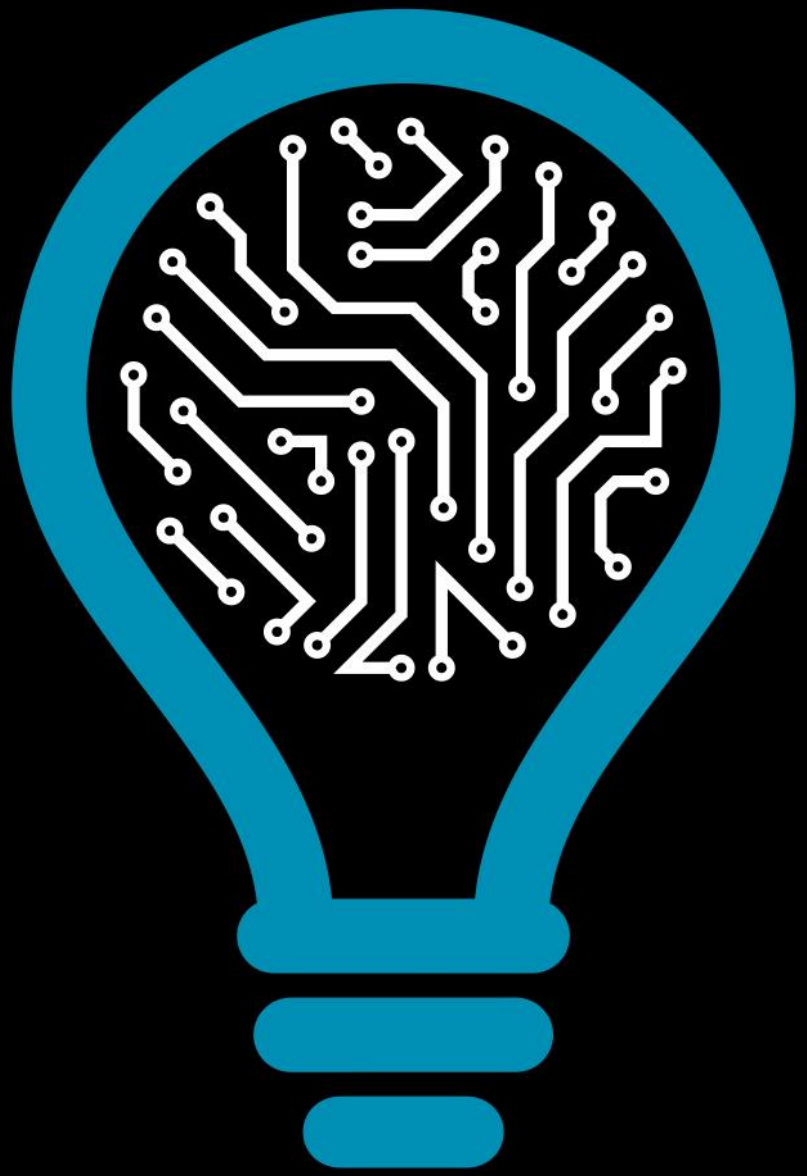

INESCTEC

INSTITUTE FOR SYSTEMS AND COMPUTER ENGINEERING, TECHNOLOGY AND SCIENCE

Smart Grids: Paradigm change in electricity systems

Electric Vehicles

Renewable Energy Sources

Energy Storage

Active demand

Security of Supply

Market driven approach

Grid Reliability

New energy & grid services

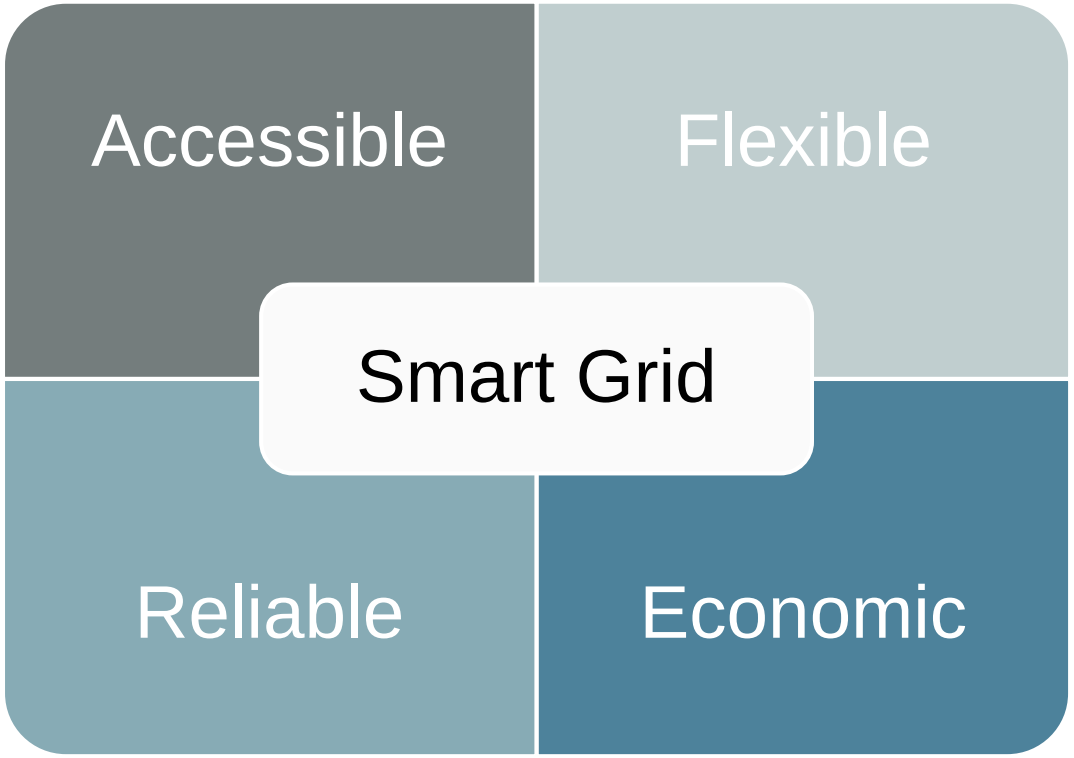

Smart Grids: Why we need it?

DG and EV can have significant impact in distribution networks:

- Bidirectional power flows
- Voltage rise effect
- Increased uncertainty in load diagram
- Congestion problems

Need for increased **flexibility**

Need for extended **observability**

Need for improved **controllability**

Without EV

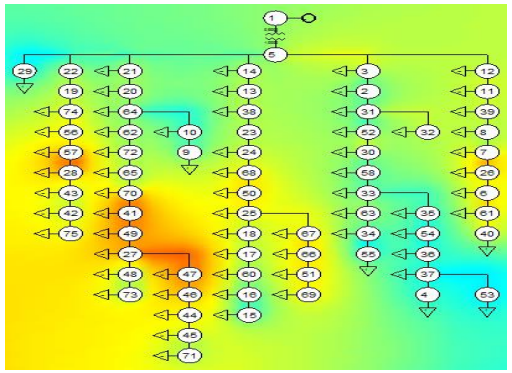

Dumb Charging

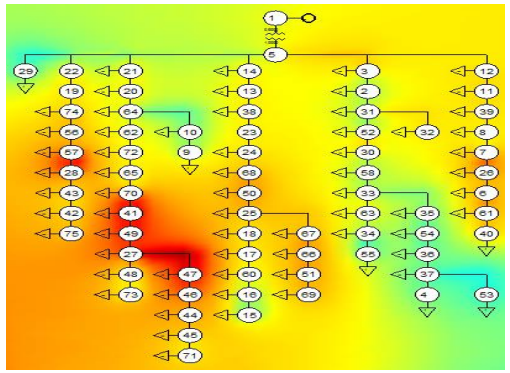

Dual Tariff

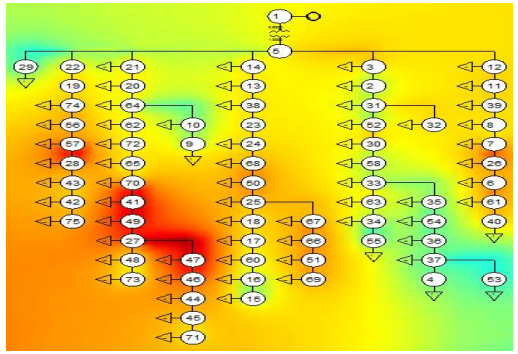

Smart Charging

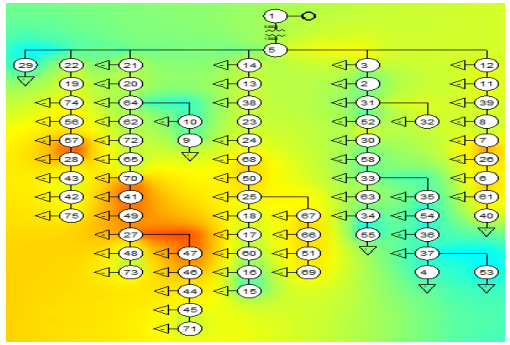

Lines loading for a LV network with a 400 kVA transformer

Smart and Flexible Distribution Network

Flexibility is the key for smart distribution grids

FLEXIBILITY

- Distributed storage
- Smart Charging
- Demand Response
- Grid Support Services
- Advanced network applications
- Distributed Automation

Smart Grid technologies: Why do we need it?

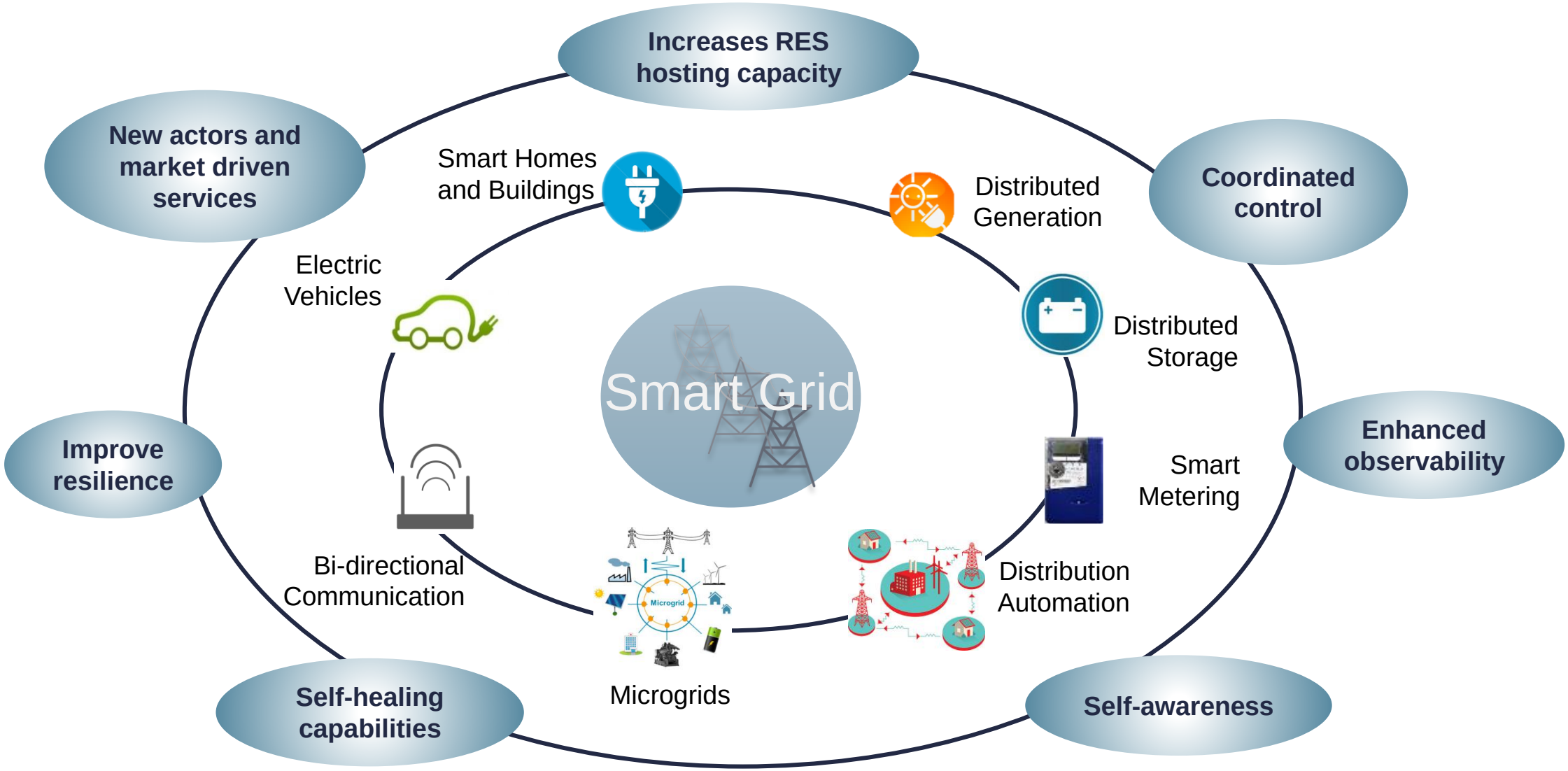

Smart Grids Technologies: AMI and smart metering

Advanced Metering Infrastructure is an opportunity for increasing LV network **observability** and **controllability**

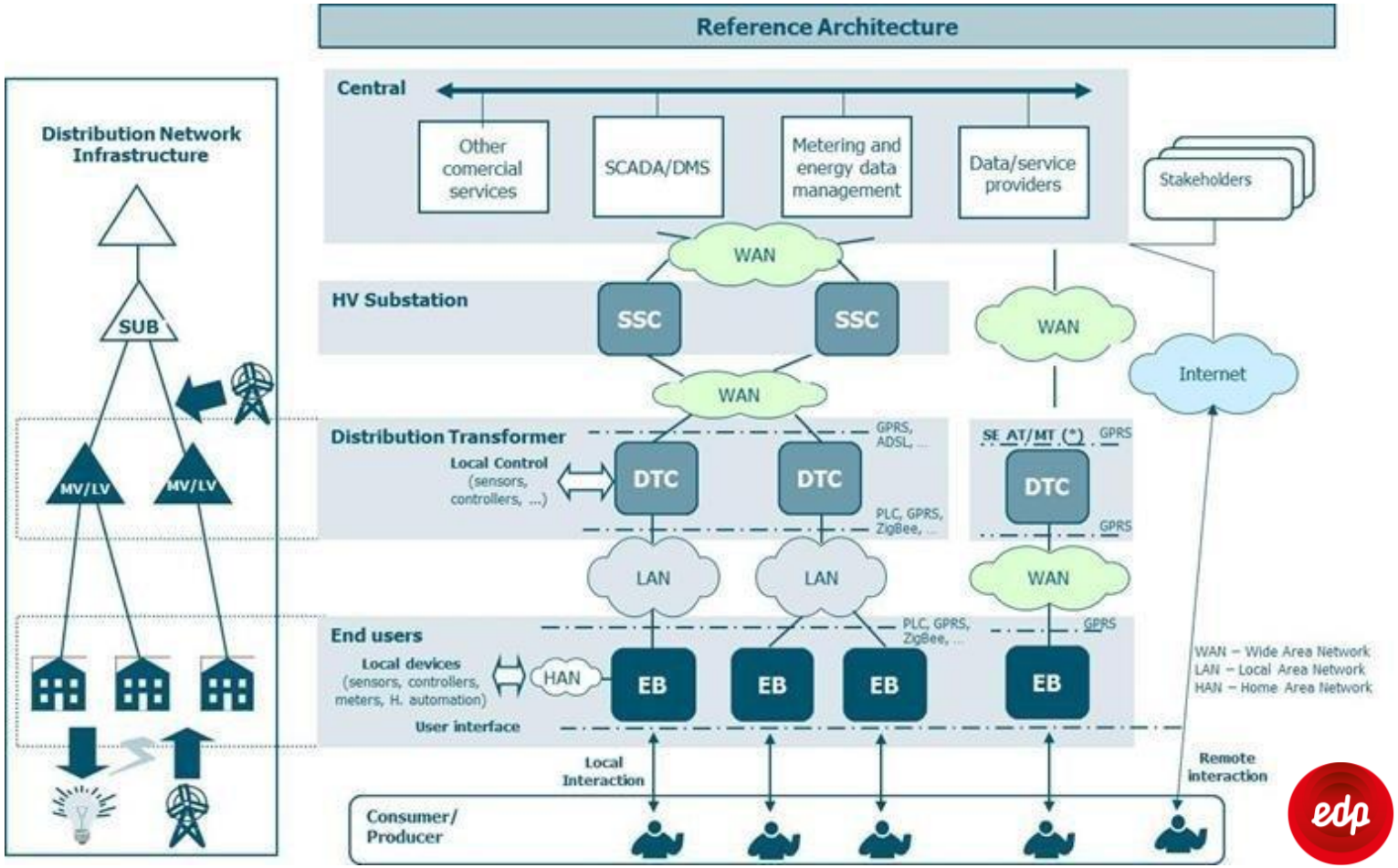

InovGrid Reference Architecture

Smart Grids Technologies: Microgrids

The MG can be regarded as the cell of future Smart Grids:

- Enhance the observability and controllability of distribution systems
- Actively integrate EV and RES
- Promote a coordinated control
- Provide self-healing capabilities and perform local service restoration strategies

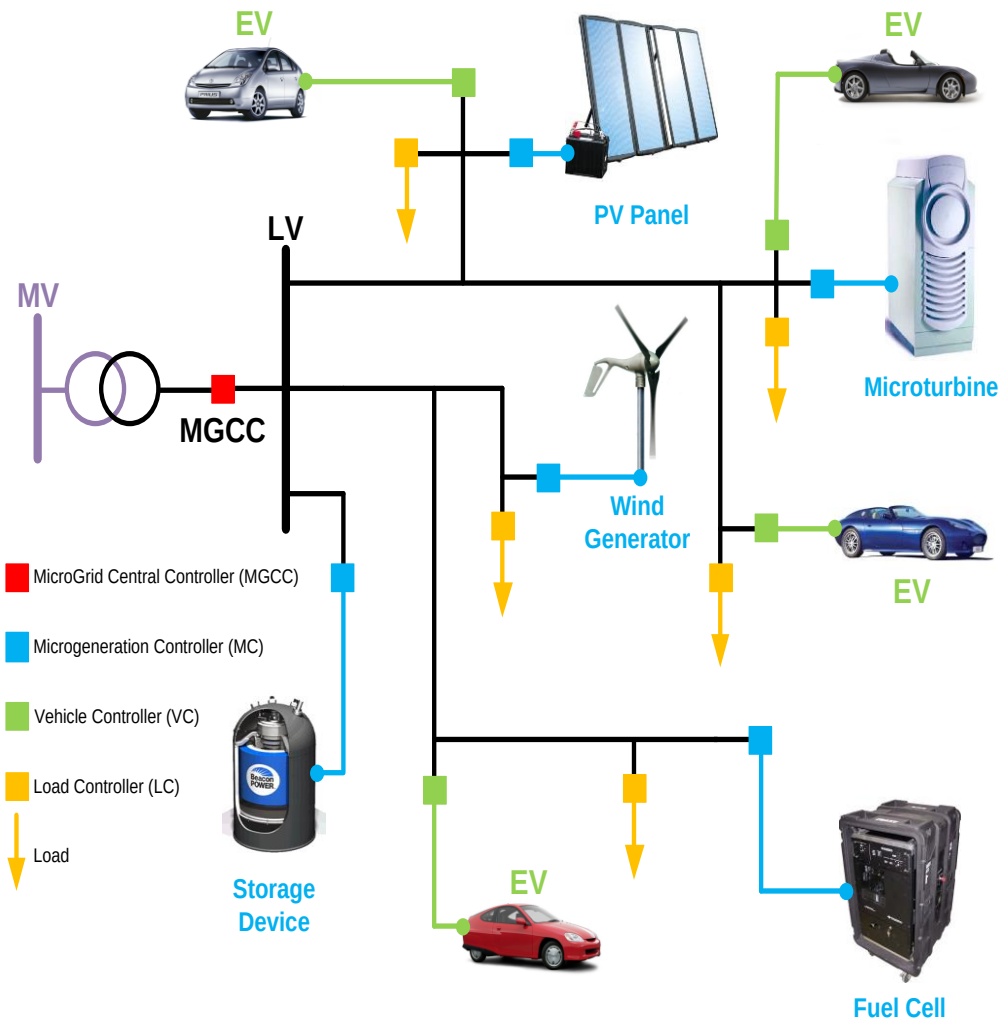

Smart and Flexible Distribution Network: Grid Support Services

Funded by the European Commission Grant No 645963

Grid Support Services	Smart Grid Technologies	
Reserve provision	Distributed Storage	
Congestion Management	Distributed Generation	Demand Response
Voltage/ Var Support	Smart power converters	Energy Communities
Intentional Islanding	Electric Vehicles	Microgrids

Smart and Flexible Distribution Network: Distributed Storage

Funded by the European Commission Grant No 645963

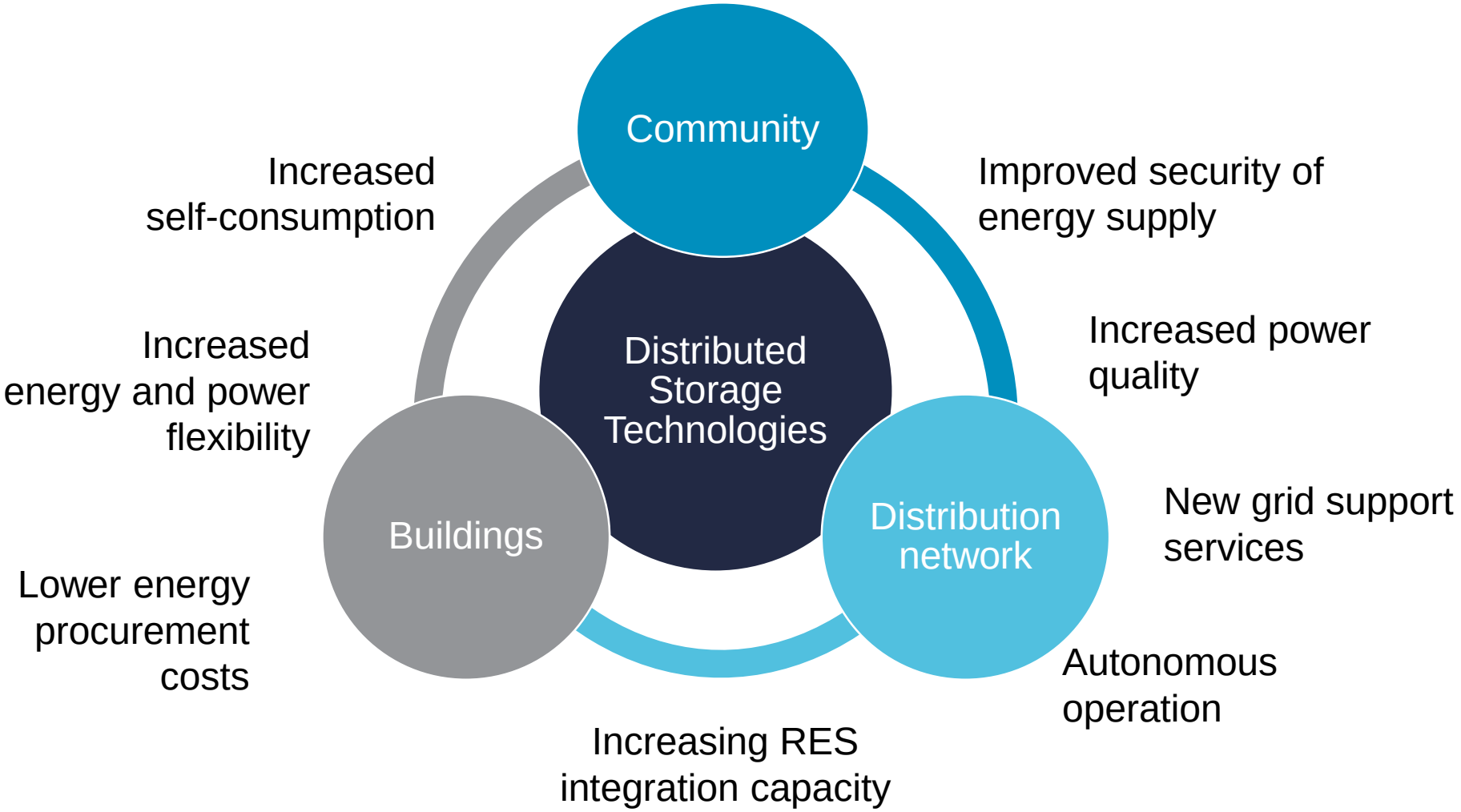

Smart and Flexible Distribution Network: Self-healing

Funded by the European Commission Grant No 645963

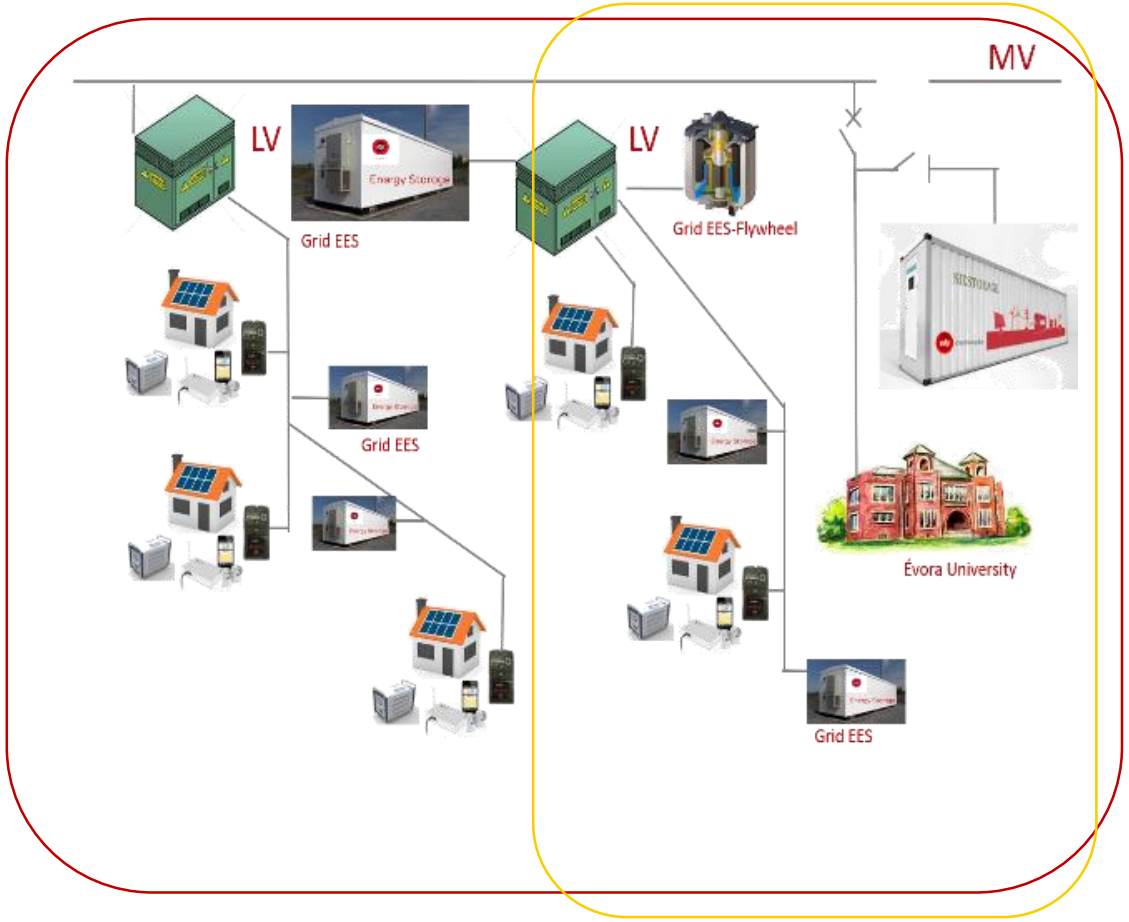

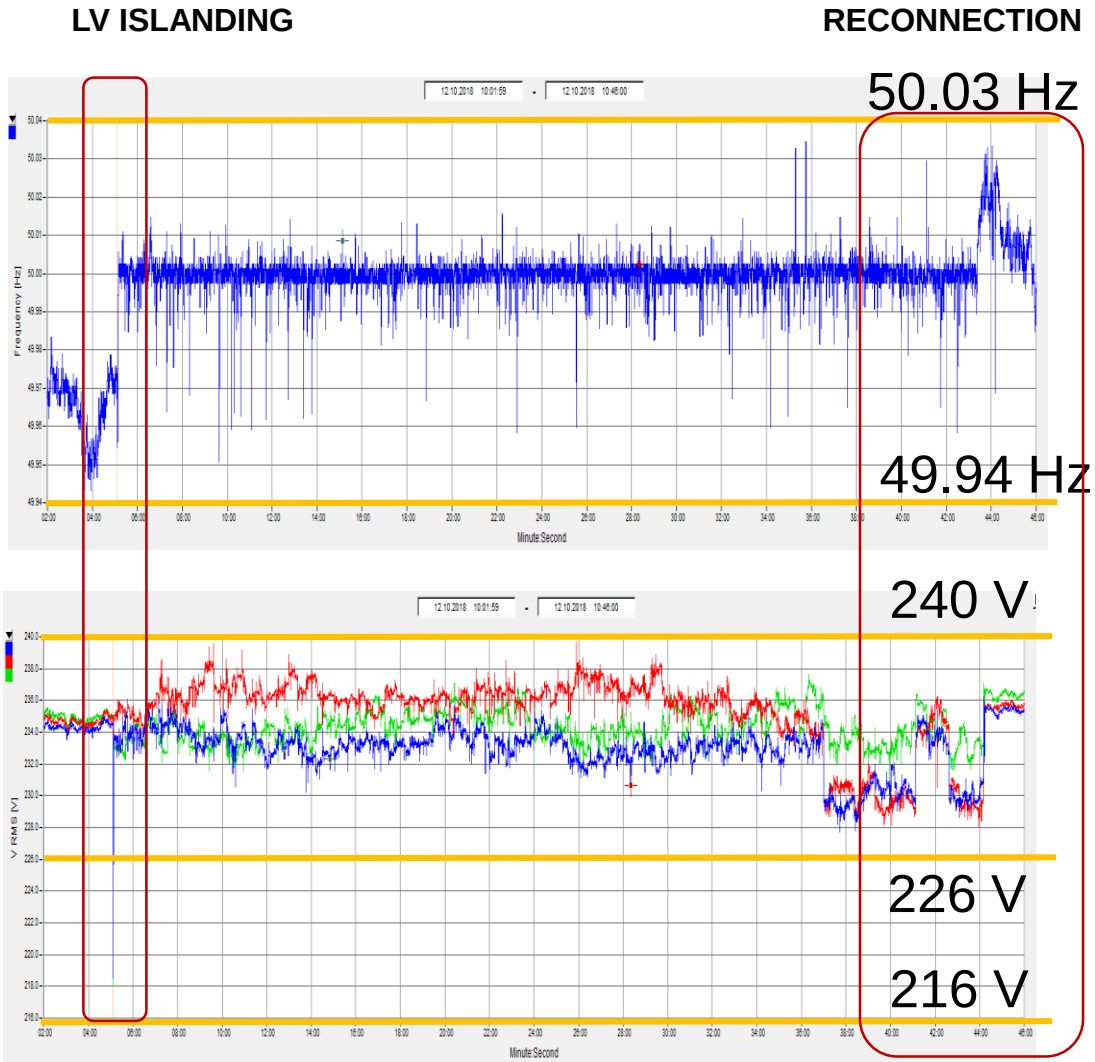

H2020 SENSIBLE Project Pilot

Smart and Flexible Distribution Network: SENSIBLE project main results

Funded by the European Commission Grant No 645963

93%

REDUCTION RES ENERGY CURTAILMENT

65%

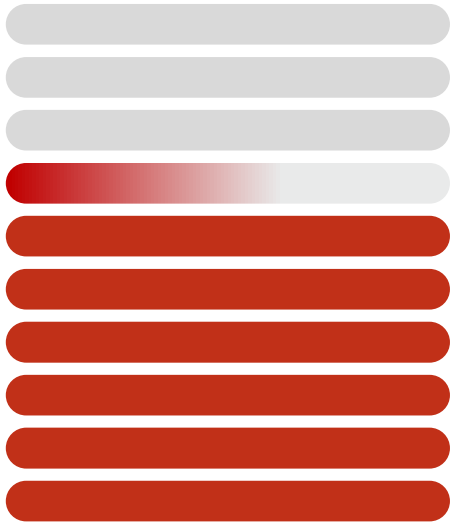

INCREASE SELF-CONSUMPTION

23-25%

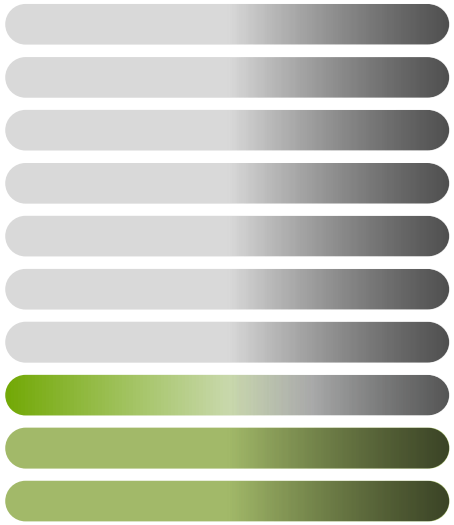

IMPROVEMENT CONTINUITY OF SERVICE (SAIFI AND SAIDI)

16-24%

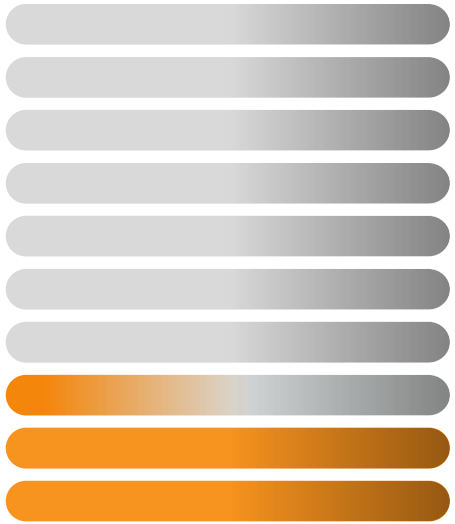

DEFERRED DISTRIBUTION CAPACITY INVESTMENT

Smart Grid Technologies: Future challenges

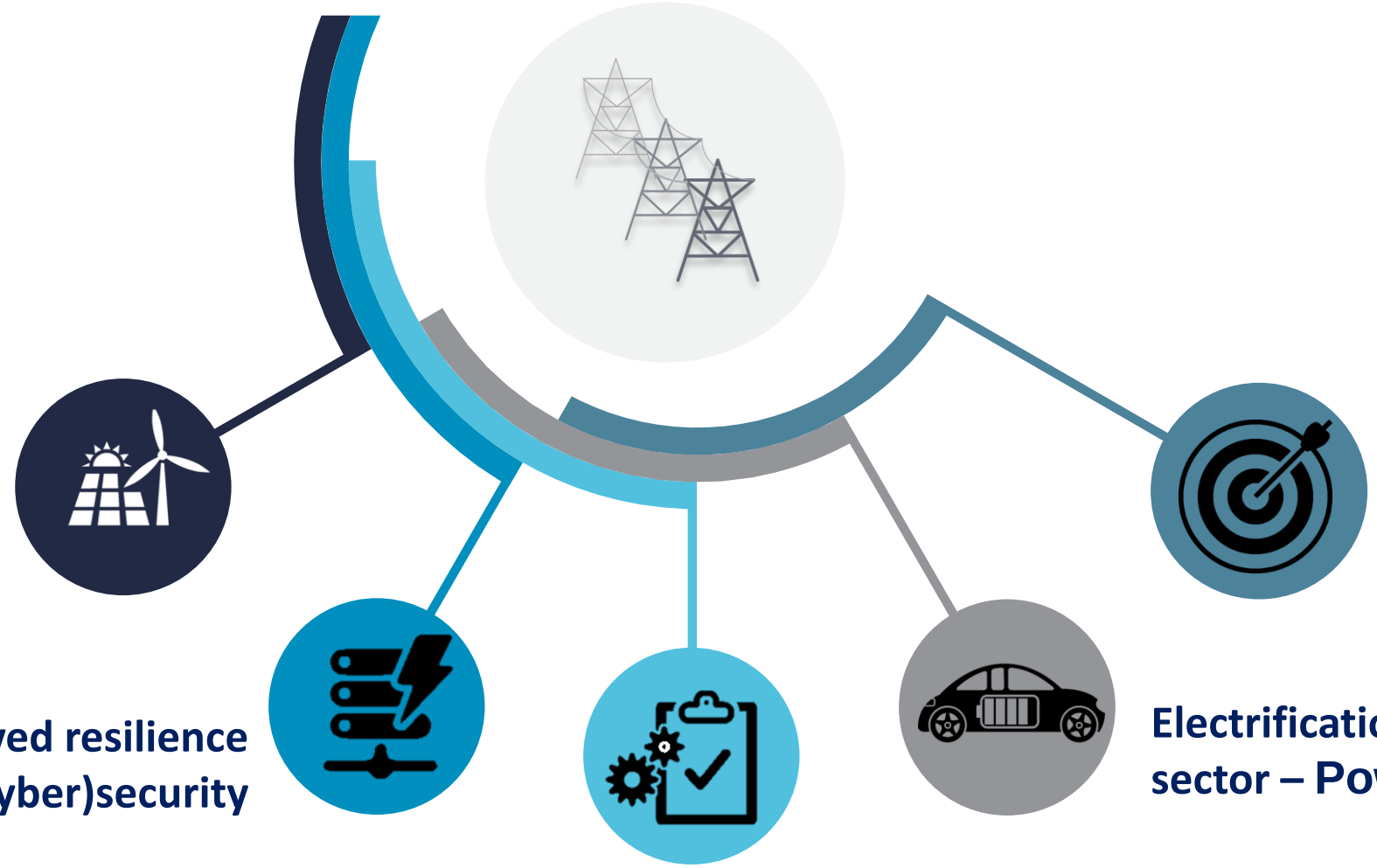

Power System with 100% Renewable Energy

Improved resilience and (cyber)security

Improved asset management

Electrification of energy sector – Power-to-X

Consumer centric energy markets

Smart Grid Technologies: Digital Technologies

Advanced Analytics

Predictive management and corrective control

Blockchain

Decentralized energy transactions

Data Visualization

Asset optimization, improved situational awareness

Cyber Security

Ensuring security of assets and systems, data privacy

IoT

Interoperable sensors and edge computing

Drones and UAVs

Network mapping and inspection

Augmented and virtual reality

Maintenance and crew support

Distributed Computing

Online optimization and security assessment applications

Smart Grid: Future vision

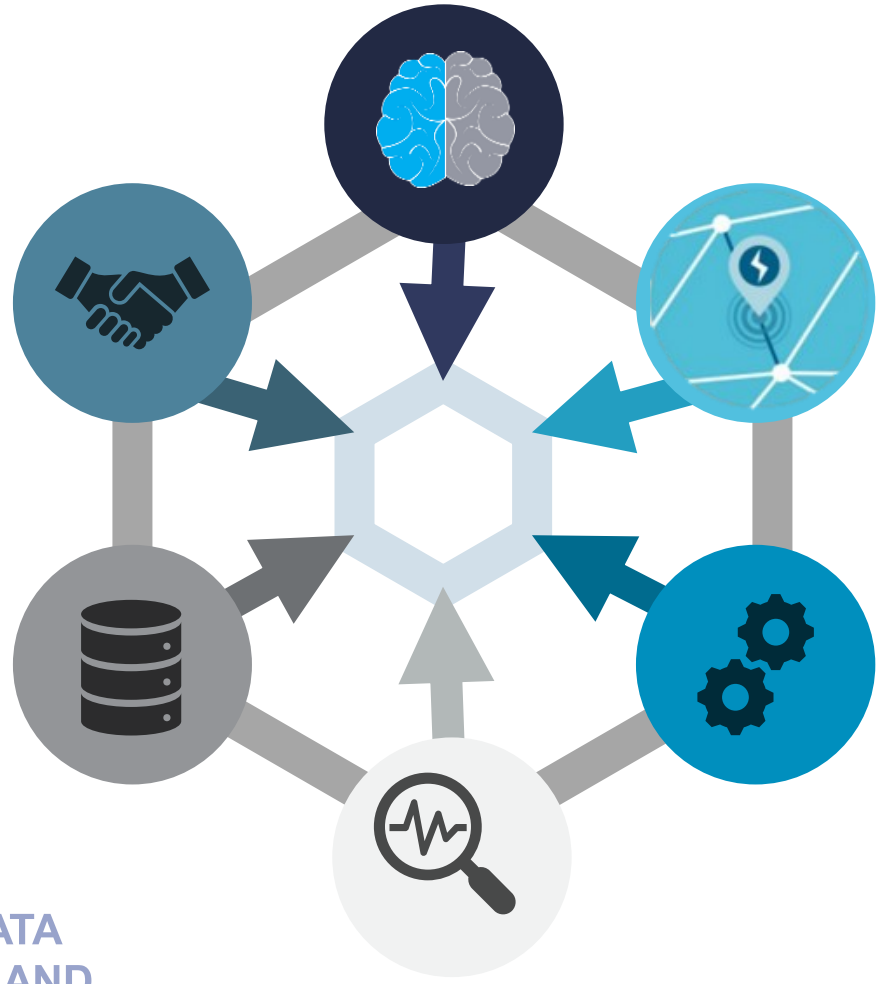

DECISION SUPPORT TOOLS

SMART POWER CONVERTERS

DISTRIBUTED AUTOMATION

PREDICTIVE NETWORK MANAGEMENT

ADAPTIVE DISTRIBUTION NETWORK PROTECTION

REAL-TIME DATA PROCESSING AND ANALYTICS

ASSET CONDITION MONITORING

- INESC TEC
- R DR. ROBERTO FRIAS
- 4200-465 PORTO
- PORTUGAL

T +351 222 094 000
F +351 222 094 050
info@inesctec.pt
www.inesctec.pt